# Work Order ID 52908

*October 19, 2009 12:42:07 PM*



**Item ID:** D2572
**Revision ID:** E
**Item Name:** Saddle, Fwd In 205

**Start Date:** 10/19/09 **Start Qty:** ~~6.00~~ 10
**Required Date:** 11/02/09 **Req'd Qty:** 6.00
**Reference:**

**Accept**

**Setup Start**
**Stop**

**Cust Item ID:**
**Customer:**

**Run Start**
**Stop**

**Approvals:** **Process Plan:** RL **Date:** 09-10-19 **Tooling:** **Date:**
**QC:** **Date:** **SPC (Y/N):** **Date:**

| Sequence ID/ Work Center ID | Operation Description | Set Up/ Run Hours | Draw Number | Draw Rev. | Plan Code | Accept Qty | Reject Qty | Reject Number | Insp. Stamp |
|---|---|---|---|---|---|---|---|---|---|
| **Draw Nbr** | **Revision Nbr** | | | | | | | | |
| D2572 | Rev E | | | | | | | | |
| 100 | HAAS CNC VERTICAL MACHINING #1 | 0.00 | | | | 10 | 0 | | |
| HAAS 1 | **Memo** | 0.00 | | | | | | | |
| HAAS CNC vertical machine #1 | Program Batch No. 52908<br>Double check by: B.a<br>1-Machine Step No 1 per Folio FA051 and inspect per attached Dimension Sheets<br>2-Machine Step No 2 per Folio FA051 and inspect per attached Dimension Sheets<br>3-Machine Step No 3 per Folio FA051 and insp | | | | | | | | |
| 110 | CONVENTIONAL MILLING MACHINE | 0.00 | | | | 10 | 0 | | |
| Mill Conv | **Memo** | 0.00 | | | | | | | |
| Conventional Milling Machine | Machine keyway as per dwg D2571 & D2572 | | | | | | | | |

SB 09/10/22

SB 09/10/22

# Work Order ID 52908

*October 19, 2009 12:42:07 PM*



**Item ID:** D2572
**Revision ID:** E
**Item Name:** Saddle, Fwd In 205

**Accept**

**Setup Start**
**Stop**

**Start Date:** 10/19/09 **Start Qty:** 6.00
**Required Date:** 11/02/09 **Req'd Qty:** 6.00
**Reference:**

**Cust Item ID:**
**Customer:**

**Approvals:** **Process Plan:** _____ **Date:** _____ **Tooling:** _____ **Date:** _____
**QC:** _____ **Date:** _____ **SPC (Y/N):** _____ **Date:** _____

**Run Start**
**Stop**

| Sequence ID/ Work Center ID | Operation Description | Set Up/ Run Hours | Draw Number | Draw Rev. | Plan Code | Accept Qty | Reject Qty | Reject Number | Insp. Stamp |
|---|---|---|---|---|---|---|---|---|---|
| 120<br>QC<br>Quality Control | QC2- Inspect parts off machine FAI/FAIB<br>**Memo** | 0.00<br>0.00 | SF 09/10/22 | | | 10 | 0 | | |
| 130<br>QC<br>Quality Control | QC8- Inspect parts - second check<br>**Memo** | 0.00<br>0.00 | 09/10/26 | | | 10 | 0 | | |
| 140<br>HandFinish<br>Hand Finishing | Chemical Conversion Coat per QSI005 4.1<br>**Memo** | 0.00<br>0.00 | BR 09-10-27 | | | 10 | | | |

# Work Order ID 52908

*October 19, 2009 12:42:07 PM*



**Item ID:** D2572
**Revision ID:** E
**Item Name:** Saddle, Fwd In 205

**Accept**

**Setup Start**
**Stop**

**Start Date:** 10/19/09 **Start Qty:** 6.00
**Required Date:** 11/02/09 **Req'd Qty:** 6.00
**Reference:**

**Cust Item ID:**
**Customer:**

**Run Start**
**Stop**

**Approvals:** **Process Plan:** _____ **Date:** _____ **Tooling:** _____ **Date:** _____
**QC:** _____ **Date:** _____ **SPC (Y/N):** _____ **Date:** _____

| Sequence ID/ Work Center ID | Operation Description | Set Up/ Run Hours | Draw Number | Draw Rev. | Plan Code | Accept Qty | Reject Qty | Reject Number | Insp. Stamp |
|---|---|---|---|---|---|---|---|---|---|
| 150 | White Gloss(Ref:4.3.5.1) per QSI005 4.3-Alum | 0.00 | | | | | | | |
| Powdercoat | M1122260 | | | | | | | | |
| Powder Coating | Memo | 0.00 JH 09/10/27 | | | | (10) | 0 | | |
| | START TIME: 11:00AM | | | | | | | | |
| | OVEN TEMPERATURE: 320°F | | | | | | | | |
| | FINISH TIME: 11:30AM | | | | | | | | |
| 160 | QC3- Inspect Part Finish | 0.00 BK 09-10-27 | | | | (10) | | | |
| QC | Memo | 0.00 | | | | | | | |
| Quality Control | | | | | | | | | |
| 170 | Identify as per dwg & Stock Location: 433 | 0.00 | | | | | | | |
| Packaging | Memo | 0.00 | | | | 9/10/28 | (10x) | SP | |
| Packaging | | | | | | | | | |

# Work Order ID 52908

*October 19, 2009 12:42:07 PM*



**Item ID:** D2572
**Revision ID:** E
**Item Name:** Saddle, Fwd In 205

**Accept**

**Setup Start**
**Stop**

**Start Date:** 10/19/09 **Start Qty:** 6.00
**Required Date:** 11/02/09 **Req'd Qty:** 6.00
**Reference:**

**Cust Item ID:**
**Customer:**

**Approvals:** **Process Plan:** _____ **Date:** _____ **Tooling:** _____ **Date:** _____
**QC:** _____ **Date:** _____ **SPC (Y/N):** _____ **Date:** _____

**Run Start**
**Stop**

| Sequence ID/ Work Center ID | Operation Description | Set Up/ Run Hours | Draw Number | Draw Rev. | Plan Code | Accept Qty | Reject Qty | Reject Number | Insp. Stamp |
|---|---|---|---|---|---|---|---|---|---|
| 180 | QC21- Final Inspection - Work Order Release | 0.00 | | | | | | 11/5/11 | |
| QC<br>Quality Control | **Memo** | 0.00 | | | | | | | |

BI 09-1028
(19)

# Picklist Print

*October 19, 2009 12:42:11 PM*



**Work Order ID:** 52908

**Parent Item:** D2572RevE

**Parent Item Name:** Saddle, Fwd In 205

**Comments:**

**Start Date:** 10/19/09 **Required Date:** 11/02/09

**Start Qty:** 6.00 **Required Qty:** 6.00

| Component Item ID/ Item Name | Replacement Item ID | Mfg/ Purch | Bin Item | Primary Location | Last Location | Route Seq ID | Unit of Measure | Qty on Hand | Remaining Qty To Pick | Qty Issued | Date Issued | Status |
|---|---|---|---|---|---|---|---|---|---|---|---|---|
| D6101-005RevB<br>Saddle Billet | | Manufactured | No | | | 100 | Each | 0.0000 | 6.0000 | | | |

Batch# B4641 mk 09/10/21 10

| DART AEROSPACE LTD | Work Order: | 52908 |
|---|---|---|
| | | |
| **Description:** Saddle, Fwd Inboard | **Part Number:** | **D2572** |
| | | |
| **Inspection Dwg:** D2572 Rev. E | | **Page 1 of 1** |

Inspect dimensions highlighted on inspection sheet drawing D2572 Rev. E and record below:

| | | | | Recorded Actual Dimensions | | | | | |
|---|---|---|---|---|---|---|---|---|---|
| **Dim** | **Min** | **Max** | **Go/No Go Gauge** | **1** | **2** | **3** | **4** | **By** | **Date** |
| A | 0.438 | 0.443 | | .439 | .439 | .440 | .440 | | |
| B | 1.745 | 1.755 | | 1.749 | 1.749 | 1.750 | 1.750 | | |
| C | 3.495 | 3.505 | | 3.500 | 3.499 | 3.500 | 3.500 | | |
| D | 1.745 | 1.755 | | 1.749 | 1.748 | 1.750 | 1.750 | | |
| E | 7.990 | 8.010 | | 8.001 | 8.001 | 8.000 | 8.000 | | |
| F | 0.490 | 0.510 | | .498 | .503 | .500 | .502 | | |
| G | 0.257 | 0.262 | | .259 | .259 | .259 | .259 | | |
| H | 0.375 | 0.380 | | .378 | .377 | .377 | .378 | | |
| I | 0.490 | 0.510 | | .501 | .501 | .501 | .500 | | |
| J | 1.174 | 1.184 | | 1.177 | 1.177 | 1.177 | 1.177 | | |
| K | 0.558 | 0.578 | | .569 | .569 | .569 | .569 | | |
| L | 1.174 | 1.184 | | 1.177 | 1.178 | 1.177 | 1.177 | | |
| M | 1.490 | 1.500 | | 1.493 | 1.493 | 1.494 | 1.494 | | |
| N | 2.495 | 2.505 | | 2.499 | 2.499 | 2.499 | 2.498 | | |
| O | 3.869 | 3.879 | | 3.873 | 3.872 | 3.874 | 3.873 | | |
| P | 0.115 | 0.135 | | .122 | .122 | .122 | .127 | | |
| Q | 0.115 | 0.135 | | .135 | .135 | .135 | .135 | | |
| R | 0.240 | 0.260 | | .249 | .250 | .250 | .252 | | |
| S | 0.115 | 0.135 | | .130 | .134 | .134 | .132 | | |
| T | 0.178 | 0.198 | | .188 | .188 | .188 | .188 | | |
| U | 2.940 | 2.980 | | 2.958 | 2.959 | 2.959 | 2.960 | | |
| V | 0.230 | 0.250 | | .238 | .239 | .239 | .238 | | |
| W | 0.115 | 0.135 | | .130 | .128 | .130 | .128 | | |
| X | 0.307 | 0.312 | | .312 | .312 | .310 | .310 | | |
| Y | 0.760 | 0.765 | | .760 | .760 | .760 | .760 | | |
| Z | 0.352 | 0.372 | | .366 | .366 | .364 | .364 | | |
| AA | 0.470 | 0.530 | | .500 | .500 | .500 | .500 | | |
| AB | 0.615 | 0.635 | | .624 | .624 | .624 | .630 | | |
| AC | 0.053 | 0.073 | | .063 | .063 | .063 | .063 | | |
| AD | 0.240 | 0.260 | | .246 | .246 | .245 | .244 | | |
| AE | 1.375 | 1.395 | | 1.386 | 1.386 | 1.385 | 1.387 | | |
| AF | 0.115 | 0.135 | | .135 | .135 | .135 | .135 | | |
| AG | 0.240 | 0.280 | | .260 | .260 | .255 | .260 | | |
| AH | 0.240 | 0.260 | | .248 | .249 | .250 | .248 | | |
| AI | 2.000 | 2.020 | | 2.002 | 2.002 | 2.001 | 2.004 | | |
| AJ | 0.023 | 0.043 | | .033 | .033 | .033 | .033 | | |
| **Accept/Reject** | | | | | | | | | |

| | |
|---|---|
| Measured by: | JML |
| Date: | 09/10/21 |

| | |
|---|---|
| Audited by | |
| Date: | 05/10/26 |

| Rev | Date | Change | Revised by | Approved |
|---|---|---|---|---|
| A | | New Issue | RF | |
| B | 02.09.24 | Re-format; Added Rev. D | KJ | |
| C | 02.10.11 | Re-format; Added DT8682, DT8683, DT8684 | KJ | |
| D | 05.05.05 | Added dimension AI | KJ/RF | |
| E | 05.12.05 | Added dimension AJ | KJ/JLM | |

| DART AEROSPACE LTD | Work Order: | |
|---|---|---|
| | | |
| **Description:** Saddle, Fwd Inboard | **Part Number:** | **D2572** |
| | | |
| **Inspection Dwg:** D2572 Rev. E | | **Page 1 of 1** |

Inspect dimensions highlighted on inspection sheet drawing D2572 Rev. E and record below:

| | | | | Recorded Actual Dimensions | | | | | |
|---|---|---|---|---|---|---|---|---|---|
| **Dim** | **Min** | **Max** | **Go/No Go Gauge** | 5A | 6 2\ | 7S | 8A | **By** | **Date** |
| A | 0.438 | 0.443 | | .440 | .440 | .440 | .440 | | |
| B | 1.745 | 1.755 | | 1.750 | 1.750 | 1.750 | 1.750 | | |
| C | 3.495 | 3.505 | | 3.500 | 3.500 | 3.500 | 3.500 | | |
| D | 1.745 | 1.755 | | 1.750 | 1.750 | 1.750 | 1.750 | | |
| E | 7.990 | 8.010 | | 8.000 | 8.000 | 8.000 | 8.000 | | |
| F | 0.490 | 0.510 | | .505 | .500 | .506 | .503 | | |
| G | 0.257 | 0.262 | | .259 | .259 | .259 | .259 | | |
| H | 0.375 | 0.380 | | .377 | .377 | .377 | .377 | | |
| I | 0.490 | 0.510 | | .501 | .500 | .502 | .502 | | |
| J | 1.174 | 1.184 | | 1.180 | 1.180 | 1.180 | 1.180 | | |
| K | 0.558 | 0.578 | | .570 | .570 | .572 | .570 | | |
| L | 1.174 | 1.184 | | 1.180 | 1.180 | 1.180 | 1.180 | | |
| M | 1.490 | 1.500 | | 1.495 | 1.495 | 1.495 | 1.495 | | |
| N | 2.495 | 2.505 | | 2.500 | 2.500 | 2.500 | 2.500 | | |
| O | 3.869 | 3.879 | | 3.874 | 3.874 | 3.874 | 3.874 | | |
| P | 0.115 | 0.135 | | .126 | .126 | .128 | .126 | | |
| Q | 0.115 | 0.135 | | .135 | .135 | .135 | .135 | | |
| R | 0.240 | 0.260 | | .251 | .251 | .253 | .251 | | |
| S | 0.115 | 0.135 | | .129 | .128 | .130 | .130 | | |
| T | 0.178 | 0.198 | | .183 | .188 | .188 | .183 | | |
| U | 2.940 | 2.980 | | 2.961 | 2.961 | 2.962 | 2.962 | | |
| V | 0.230 | 0.250 | | .239 | .238 | .239 | .238 | | |
| W | 0.115 | 0.135 | | .135 | .131 | .130 | .130 | | |
| X | 0.307 | 0.312 | | .310 | .310 | .310 | .310 | | |
| Y | 0.760 | 0.765 | | .760 | .760 | .760 | .760 | | |
| Z | 0.352 | 0.372 | | .364 | .362 | .364 | .364 | | |
| AA | 0.470 | 0.530 | | .500 | .500 | .500 | .500 | | |
| AB | 0.615 | 0.635 | | .630 | .630 | .630 | .630 | | |
| AC | 0.053 | 0.073 | | .063 | .063 | .063 | .063 | | |
| AD | 0.240 | 0.260 | | .250 | .250 | .250 | .250 | | |
| AE | 1.375 | 1.395 | | 1.386 | 1.384 | 1.385 | 1.384 | | |
| AF | 0.115 | 0.135 | | .125 | .135 | .135 | .135 | | |
| AG | 0.240 | 0.280 | | .260 | .260 | .260 | .260 | | |
| AH | 0.240 | 0.260 | | .249 | .249 | .250 | .248 | | |
| AI | 2.000 | 2.020 | | 2.002 | 2.001 | 2.002 | 2.000 | | |
| AJ | 0.023 | 0.043 | | .033 | .033 | .033 | .037 | | |
| **Accept/Reject** | | | | | | | | | |

| | | | |
|---|---|---|---|
| Measured by: | [illegible] | Audited by | [illegible] |
| Date: | 09/10/22 | Date: | [illegible] |

| Rev | Date | Change | Revised by | Approved |
|---|---|---|---|---|
| A | | New Issue | RF | |
| B | 02.09.24 | Re-format; Added Rev. D | KJ | |
| C | 02.10.11 | Re-format; Added DT8682, DT8683, DT8684 | KJ | |
| D | 05.05.05 | Added dimension AI | KJ/RF | |
| E | 05.12.05 | Added dimension AJ | KJ/JLM | |

| DART AEROSPACE LTD | Work Order: | |
|---|---|---|
| | | |
| **Description:** Saddle, Fwd Inboard | **Part Number:** | D2572 |
| | | |
| **Inspection Dwg:** D2572 Rev. E | | Page 1 of 1 |

Inspect dimensions highlighted on inspection sheet drawing D2572 Rev. E and record below:

| | | | | Recorded Actual Dimensions | | | | | |
|---|---|---|---|---|---|---|---|---|---|
| **Dim** | **Min** | **Max** | **Go/No Go Gauge** | 9 | 10 | 3 | 4 | **By** | **Date** |
| A | 0.438 | 0.443 | | .440 | .440 | | | | |
| B | 1.745 | 1.755 | | 1.750 | 1.750 | | | | |
| C | 3.495 | 3.505 | | 3.500 | 3.500 | | | | |
| D | 1.745 | 1.755 | | 1.750 | 1.750 | | | | |
| E | 7.990 | 8.010 | | 8.000 | 8.000 | | | | |
| F | 0.490 | 0.510 | | .504 | .504 | | | | |
| G | 0.257 | 0.262 | | .259 | .259 | | | | |
| H | 0.375 | 0.380 | | .377 | .377 | | | | |
| I | 0.490 | 0.510 | | .500 | .500 | | | | |
| J | 1.174 | 1.184 | | 1.180 | 1.180 | | | | |
| K | 0.558 | 0.578 | | .570 | .570 | | | | |
| L | 1.174 | 1.184 | | 1.180 | 1.180 | | | | |
| M | 1.490 | 1.500 | | 1.495 | 1.495 | | | | |
| N | 2.495 | 2.505 | | 2.500 | 2.500 | | | | |
| O | 3.869 | 3.879 | | 3.874 | 3.874 | | | | |
| P | 0.115 | 0.135 | | .126 | .125 | | | | |
| Q | 0.115 | 0.135 | | .135 | .135 | | | | |
| R | 0.240 | 0.260 | | .252 | .253 | | | | |
| S | 0.115 | 0.135 | | .130 | .127 | | | | |
| T | 0.178 | 0.198 | | .188 | .188 | | | | |
| U | 2.940 | 2.980 | | 2.961 | 2.961 | | | | |
| V | 0.230 | 0.250 | | .238 | .238 | | | | |
| W | 0.115 | 0.135 | | .130 | .125 | | | | |
| X | 0.307 | 0.312 | | .310 | .310 | | | | |
| Y | 0.760 | 0.765 | | .760 | .760 | | | | |
| Z | 0.352 | 0.372 | | .364 | .364 | | | | |
| AA | 0.470 | 0.530 | | .500 | .500 | | | | |
| AB | 0.615 | 0.635 | | .630 | .630 | | | | |
| AC | 0.053 | 0.073 | | .063 | .063 | | | | |
| AD | 0.240 | 0.260 | | .250 | .250 | | | | |
| AE | 1.375 | 1.395 | | 1.385 | 1.385 | | | | |
| AF | 0.115 | 0.135 | | .135 | .135 | | | | |
| AG | 0.240 | 0.280 | | .260 | .260 | | | | |
| AH | 0.240 | 0.260 | | .248 | .251 | | | | |
| AI | 2.000 | 2.020 | | 2.020 | 2.020 | | | | |
| AJ | 0.023 | 0.043 | | .033 | .033 | | | | |
| **Accept/Reject** | | | | | | | | | |

| | | | |
|---|---|---|---|
| Measured by: | [illegible] | Audited by | [illegible] |
| Date: | 09/10/22 | Date: | 05/10/26 |

| Rev | Date | Change | Revised by | Approved |
|---|---|---|---|---|
| A | | New Issue | RF | |
| B | 02.09.24 | Re-format; Added Rev. D | KJ | |
| C | 02.10.11 | Re-format; Added DT8682, DT8683, DT8684 | KJ | |
| D | 05.05.05 | Added dimension AI | KJ/RF | |
| E | 05.12.05 | Added dimension AJ | KJ/JLM | |

SHOP COPY
RETURN TO
ENGINEERING
UNCONTROLLED COPY
SUBJECT TO AMENDMENT
WITHOUT NOTICE
WORK ORDER
NO. 52908

RELEASED
05.12.06

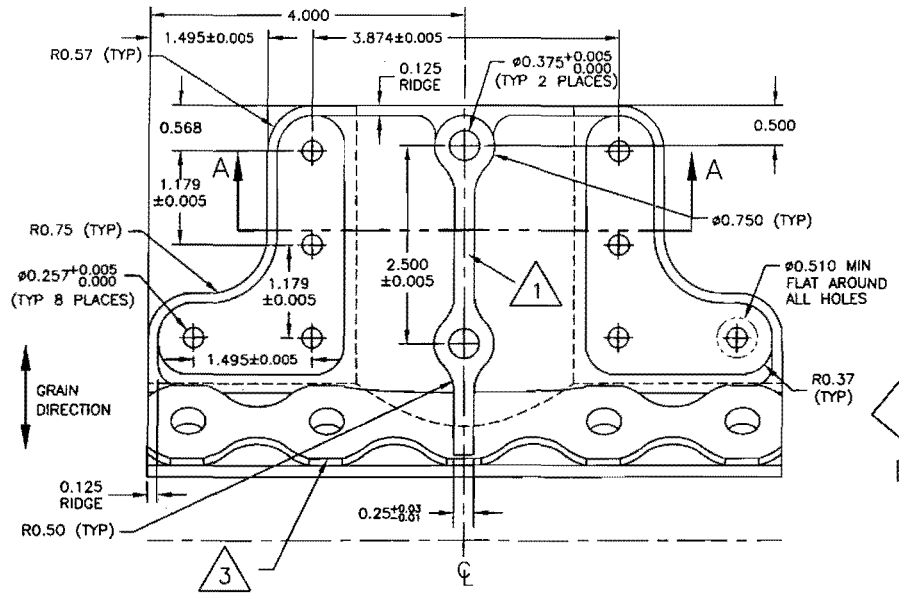


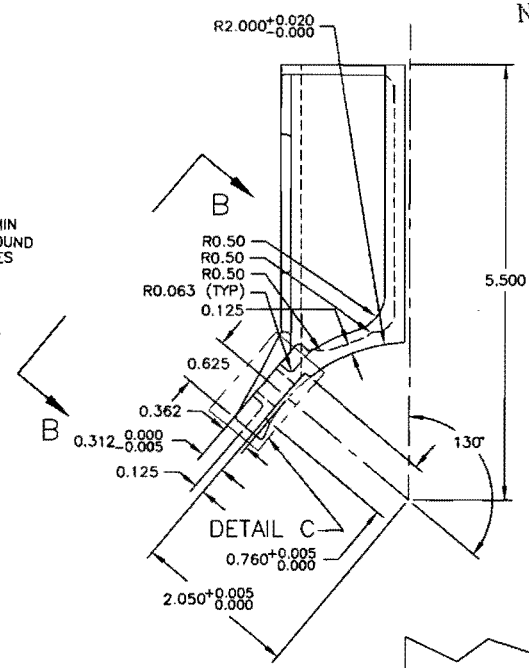


## NOTES

MATERIAL: 7075-T7351 (QQ-A-250/12)
(REF DART SPEC. D6102-003)
FINISH: ACID ETCH, ALODINE PER DART QSI 005 4.1
POWDER COAT GLOSS WHITE (REF 4.3.5.1) PER DART QSI 005 4.3
BREAK ALL SHARP EDGES 0.010 TO 0.020
TOLERANCES ARE PER DART QSI 018 UNLESS OTHERWISE NOTED

1. ENGRAVE PART AND BATCH NUMBER IN THIS AREA TO MAX DEPTH OF 0.010
2. CHAMFER 0.063" x 45° AROUND THIS SURFACE (TYPICAL 2 PLACES)
3. CHAMFER 0.063 x 45° ALL AROUND
4. CHAMFER 0.033 x 45° (SEE DETAIL C) E

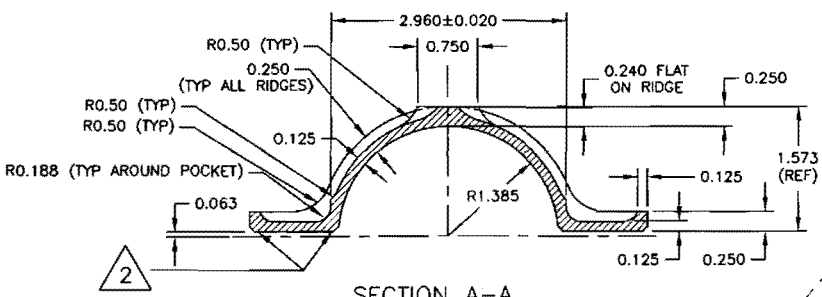


SECTION A-A

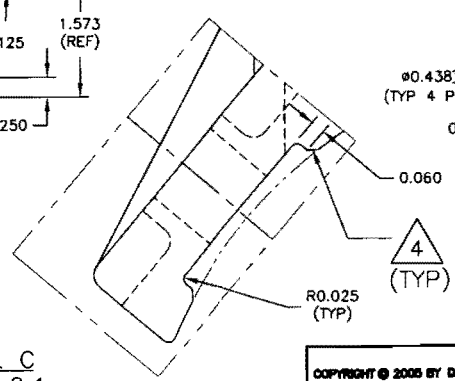


DETAIL C
SCALE 2:1

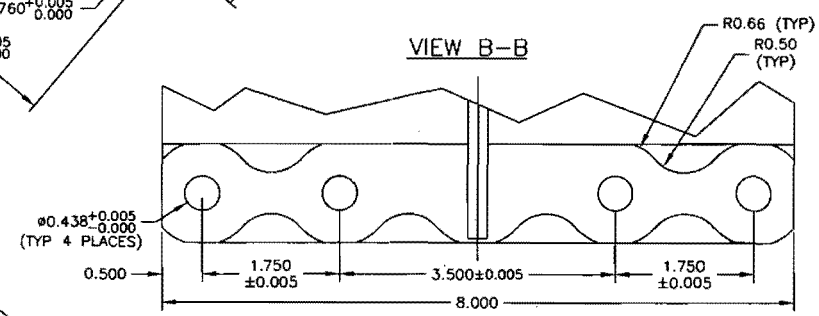


| | | |
|---|---|---|
| E | 05.07.13 | ADD CHAMFER ON RIDGE NOTE 4 |
| D | 02.09.06 | ADD RIDGES; TIGHTEN TOLERANCES |
| C | 99.10.22 | INCORP. DEO 9123/9079/9102<br>ADD DIMENSIONS PER TSR A1177 |
| B | 96.12.02 | ADD GRAIN DIR., 0.438 WAS 0.425 |
| A | 96.09.16 | NEW ISSUE |

COPYRIGHT © 2005 BY DART AEROSPACE LTD.

THIS DOCUMENT IS PRIVATE AND CONFIDENTIAL AND IS SUPPLIED ON THE EXPRESS CONDITION THAT IT IS NOT TO BE USED FOR ANY PURPOSE OR COPIED OR COMMUNICATED TO ANY OTHER PERSON WITHOUT WRITTEN PERMISSION FROM DART AEROSPACE LTD.

| | | | |
|---|---|---|---|
| DESIGN: DS | DRAWN BY: PH | DART | DART AEROSPACE LTD. HAWKESBURY, ONTARIO, CANADA |
| CHECKED | APPROVED | DRAWING NO. D2572 | REV. E<br>SHEET 1 OF 1 |
| DATE: 05.07.13 | | TITLE: INNER FWD SADDLE | SCALE: 2:3 |